SALES DRAWING SALES DRAWING

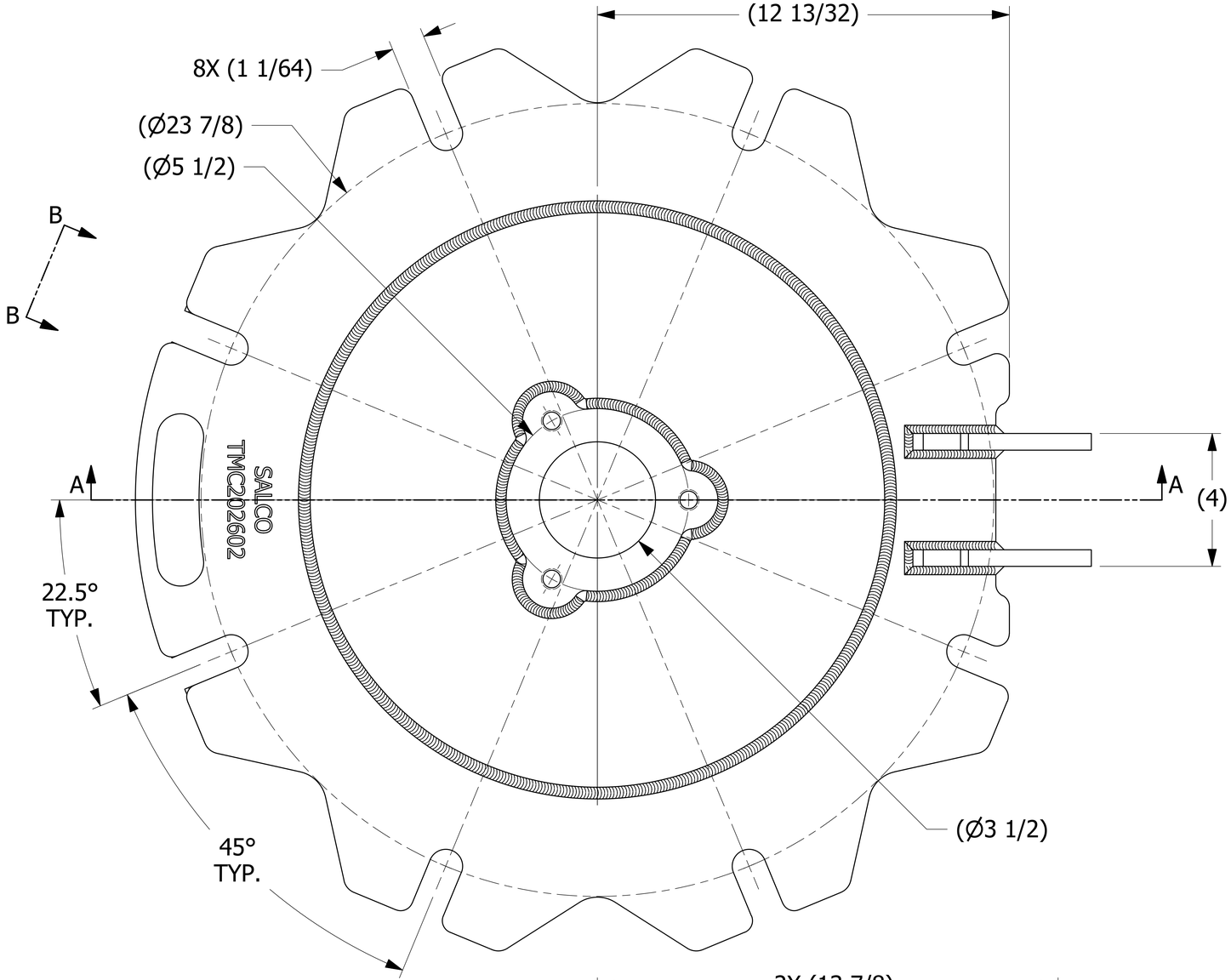

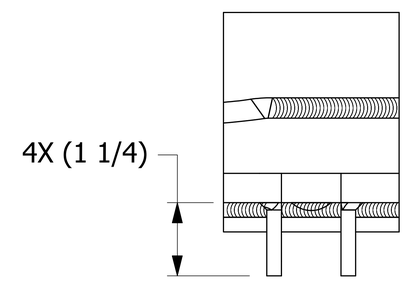

VIEW B-B
SCALE 1 : 1

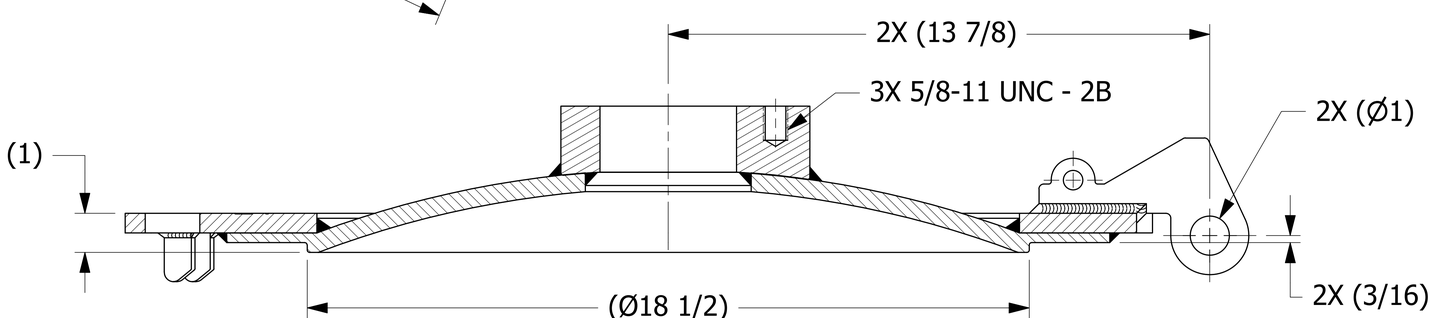

SECTION A-A

NOTE:
AAR APPROVAL # E-182113.

REV	BY	DATE	DESCRIPTION
D	WEB	5-20-19	REMOVED QAP4A-1 NOTE; Q-2.15.7 WAS QAP4C-1; UPDATED WELD NOTE TO D-008; ADDED D-005 NOTE; AAR # WAS E-089004
C	RJP	11-15-17	HINGE WELD WAS 3/8"; 4.00 +.00/-.06 WAS 4.00; ADDED NOTE 6; ADDED "SALCO" TO ENGRAVING
B	WEB	7-18-17	TMCDR202602 WAS TMCR202S6 & TMCDQIS6MF; C42806 WAS TMCHS4A; .18 WAS .06; UPDATED NOTES, DIMS, VIEWS
A	JG	4-21-15	RELEASED FOR PRODUCTION

UNLESS OTHERWISE SPECIFIED
DIMENSIONAL TOLERANCES
FRACTIONAL: ±1/16
X.XX: ±.03
X.XXX: ±.015
ANGULAR: ±1°
DEBURR ALL SHARP EDGES.
ALL MACHINED SURFACES TO HAVE A 125 RMS FINISH UNLESS NOTED OTHERWISE.
THIRD ANGLE PROJECTION

DRAWN BY:	CHL
CHECKED BY:	JRO
PROTOTYPE BY:	CHL
PROTOTYPE DATE:	3/27/2015
APPROVED FOR PRODUCTION BY:	CHL
PRODUCTION DATE:	4/21/2015

SALCO PRODUCTS, INC.

PART NAME: MANWAY COVER 20" 8-BOLT

MATERIAL: 316 SS

PROJECT #: R141015 | SHEET #: 1 OF 1 | SCALE: 2:3

DRAWING #: E41209 | PART #: TMC202602

THIS PRINT, PROPERTY OF SALCO PRODUCTS INC, CONTAINS PROPRIETARY INFORMATION AND MUST NOT BE COPIED, REPRODUCED, OR USED DETRIMENTALLY TO OUR INTEREST.

SALES DRAWING SALES DRAWING